"Vision For Water Technology"

GREATORK

ELECTRIC ACTUATOR

LQ - SERIES

PRODUCT

- QUARTER-TURN ACTUATOR
- EXPLOSION PROOF
- LOCAL CONTROL WITH LCD DISPLAY

PRODUCT OVERVIEW

LQ Series actuators adopt components including digital integrated chip, absolute encoder, multi language operation menu and display with the advantages of simple adjustment, easy operation , high enclosure protection, high reliability and stable performance. This can be used for local control and remote control both to drive and control the butterfly valves, ball valves and plug valves with 90° movement.

LQ Series actuator widely applied to the control on industry, waste and water treatment, air conditioning, chemical engineering , food industry and etc.

Standard protection class is IP67 and the explosion class is d II BT4, enclosure confirm to outdoor use.

This operation manual is applied for General type. For special type actuators, the additional Manual will be provided.

PRODUCT FEATURES

- CONTROLS : PROPORTIONAL, FLOATING AND ON-OFF
- CLUTCH-LESS MANUAL OVERRIDE(OPTIONAL)
- ISO 5210 / 5211 MOUNTING FLANGE
- IP67 PROTECTION CLASS AND D II BT4 FOR THE EXPLOSION PROOF CLASS (WITH LETTERS OF EX)
- BUILT-IN THERMAL PROTECTION PREVENT MOTOR BURN OUT.

MODULATING CONTROLLER

A modulating control unit will follow input signal for positioning and output signal for indicator.

Input signal : 4-20mA, 1-5V or 2-10V / Output signal : 4-20mA or 2-10V

OVER TORQUE PROTECTION

When load torque exceeds actuator setting torque, the actuator will give contact.

LIMIT SWITCHES

Directly engaged with driving shaft to set accurate position of valve, supplying a dry contact signal.

MANUAL OVERRIDE

The electric actuator has hand wheel which can be operated manually in case of emergency.

Manual operation : The manual position (motor is not started) will be locked itself after moving manual-override to the direction of handle wheel (if it is not successful, please turn the hand wheel within small angle). On-off is controlled by rolling hand wheel, clockwise direction is to shut.

ANALOG SIGNAL OUTPUT

This option provides 4-20mA output signal and suit for two-position control unit.

MAINTENANCE

Suggestion conventional repair or regular maintenance two times a year

GREATORK ACTUATOR

MAIN STRUCTURE

Mechanical Position Indicator
The mechanical position indicator is indicating valve position in continuously and precise

Motor
Available in 1Ph/3Ph, all motors are custom built for high-torque, low current draw and the heavy duty cycle ratings offered.

Cover
Hard anodized aluminium casting and external epoxy coated for outdoor use

Terminal Board

High grade Capacitor

Handwheel

Limit Switch

Double worm gear
Assembly self locking with Minimum backlash in the transmission

Easy Mounting Base
Standard to ISO5210/ISO5211

Manual Override

GREATORK ACTUATOR

TECHNICAL DATA

Model	Output Torque (N.M)	90⁰ running time (s)	Motor Power (W)	Motor current (A) Rated	Circle number of handwheel	Weight (kg)	Power Supply
LQ0-5	50	21	10	0.15	10	2.3	240V/1Ph/50Hz
LQ1-10	100	26	20	0.5	10	8	240V/1Ph/50Hz
LQ2-20	200	28	40	0.6	12	14	240V/1Ph/50Hz
LQ3-50	500	32	90	1.3	13	19	240V/1Ph/50Hz
LQ4-110	1100	36	36	2.2	14.5	26	240V/1Ph/50Hz
LQ4JS-200/ 250	2000/ 2500	55	120/ 180	1.5/ 2.2	46	50	240V/1Ph/50Hz
LQ4JS-400/ 600	4000/ 6000	180	120/ 180	1.5/ 2.2	73	104/ 106	240V/1Ph/50Hz

**Note : 3 Phase power supply data will be provided upon request.*

***Note : With integral module, total weight may increase 4kgs.*

STANDARD SPECIFICATION

Enclosure	Weatherproof enclosure IP67
Power Supply	240Vac 1Ph, 380V ac 3Ph 50Hz
Mounting Flange	ISO 5210/5211
Position limiting	Mechanical limit, travel switch Limit
Insulted Strength	1500V/1Min(AC240V) ,2000V/1Min(AC380V)
Ambient humidity	Relative Humidity >90%(25%)
Surrounding temperature	-20℃ to 70℃
Space heater	Anti-condensation
Self-locking	Provided by double worm gear
Motor	Induction Motor (Reversible motor)
External Coating	Hard anodized aluminium casting and external epoxy coated
Mechanical stopper	Prevent over run of travel angle when limit switch fails
Handwheel	Manual operated, ON/OFF valve directly when power off

GREATORK ACTUATOR

MOUNTING BASE DIMENSION

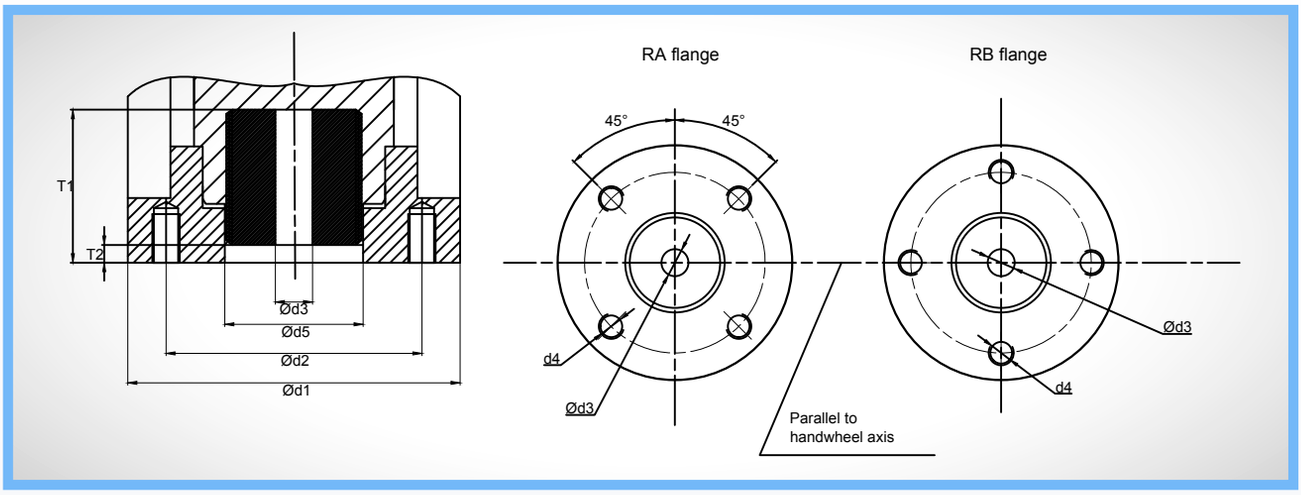

Code / item	Flange		d1	d2		d3		d5	T1	T2	d4
				Standard dimensions	Factory dimensions	Factory dimensions	Max. permission				
LQ1	RA	F05	Φ92	Φ50	Φ50 Φ70	Φ8	Φ22 □20	Φ39	42	3	4-M6 TAP DP 12
		F07		Φ70							4-M8 TAP DP 12
	RB	2"		Φ57.15	/						4-M6 TAP DP 12
		3"									
LQ2	RA	F07	Φ132	Φ70	Φ70 Φ102	Φ10	Φ32 □25	Φ48.5	49	3	4-M8 TAP DP 15
		F10		Φ102							4-M10 TAP DP 15
	RB	4"		Φ69.85	/						4-M10 TAP DP 15
		5"									
		6"									
LQ3	RA	F10	Φ146	Φ102	Φ102 Φ125	Φ10	Φ32 □25	Φ48.5	51	5	4-M10 TAP DP 15
		F12		Φ125							4-M12 TAP DP 15
	RB	8"		Φ88.9	/						4-M12 TAP DP 15
		10"									
LQ4	RA	F12	Φ176	Φ125	Φ140	0	Φ42 □38	Φ90	62	7	4-M12 TAP DP 18
		F14		Φ140							4-M16 TAP DP 25
	RB	12"		Φ107.95	/						4-M12 TAP DP 20
		14"									
LQ4JS-200/250	RA	F14	Φ215	Φ140	Φ165	0	Φ60 □50	Φ118	75	7	4-M16 TAP DP 25
		F16		Φ165							4-M20 TAP DP 25
	RB	16"		Φ158.75	/						4-M18 TAP DP 25
		18"									
		20"									
LQ4JS-400/600	RA	F16	Φ350	Φ165	Φ165 Φ254 Φ298	Φ25	Φ60/□50	Φ135	118	8	4-M20 TAP DP 25
		F25		Φ254							8-M16 TAP DP 30
		F30		Φ298							8-M20 TAP DP 35

*Notes : d2 and d3 dimensions can be processed in accordance with customer requirements of the corresponding size.

GREATORK ACTUATOR

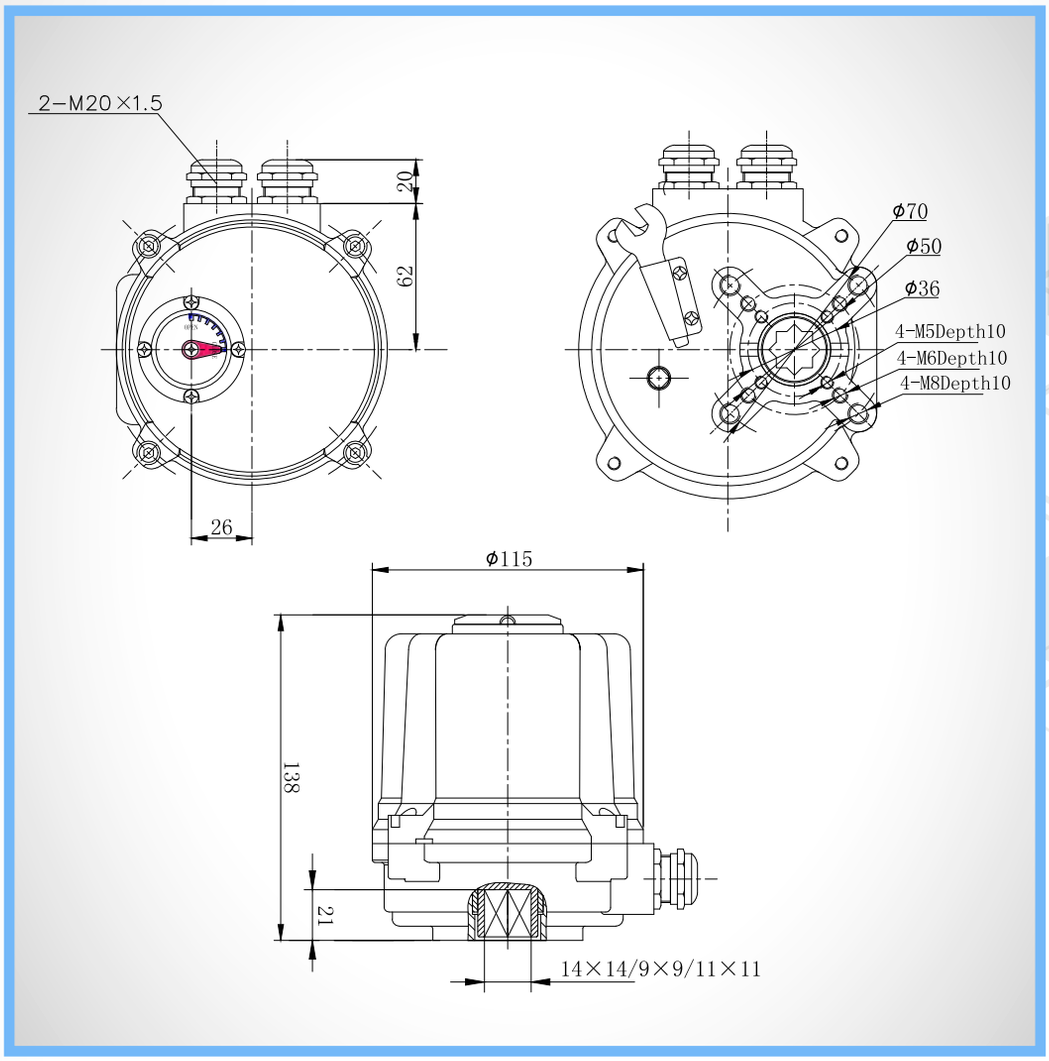

*Actuator with local control based on the basic type

LQ SER

LQO

GREATORK ACTUATOR

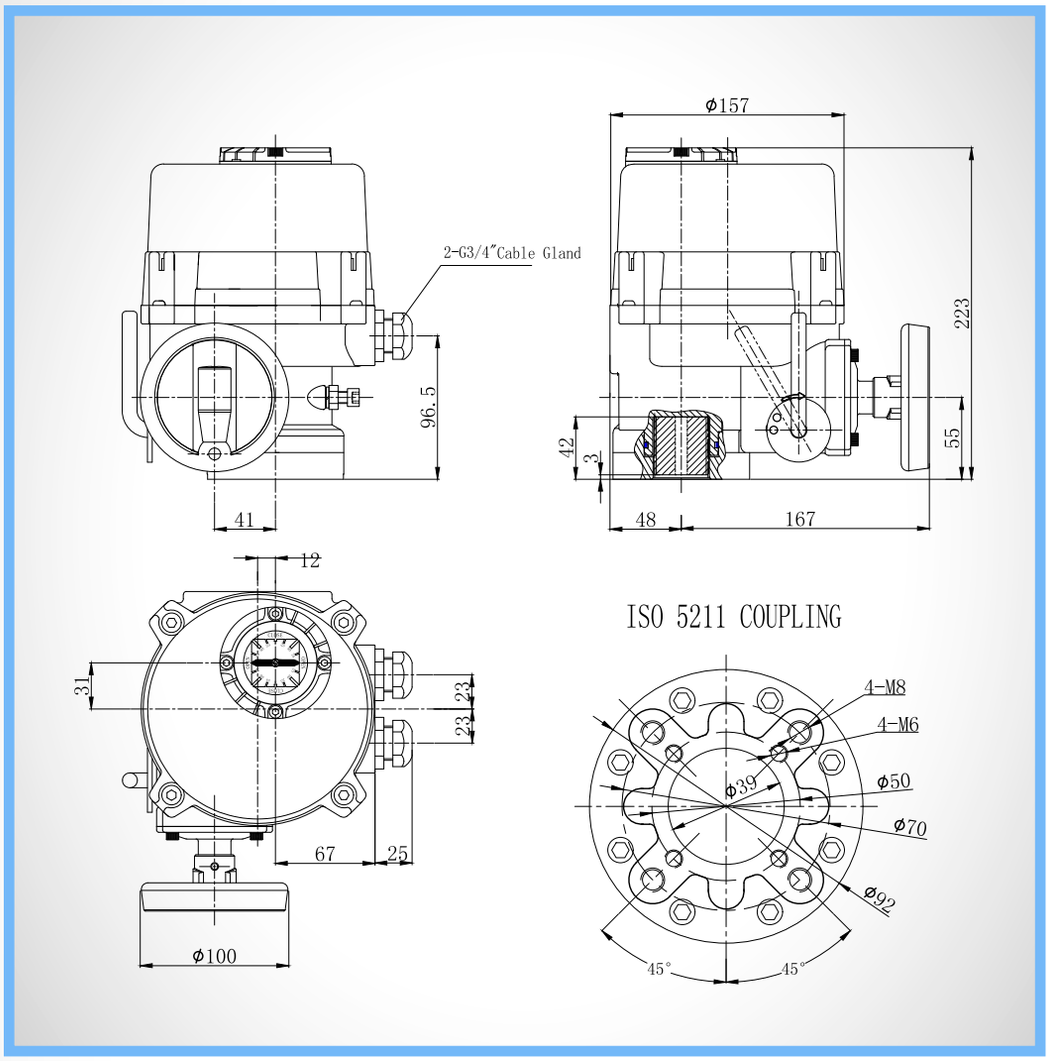

*Actuator with local control based on the basic type

IES

LQ1

GREATORK ACTUATOR

LQ2

LQ SER

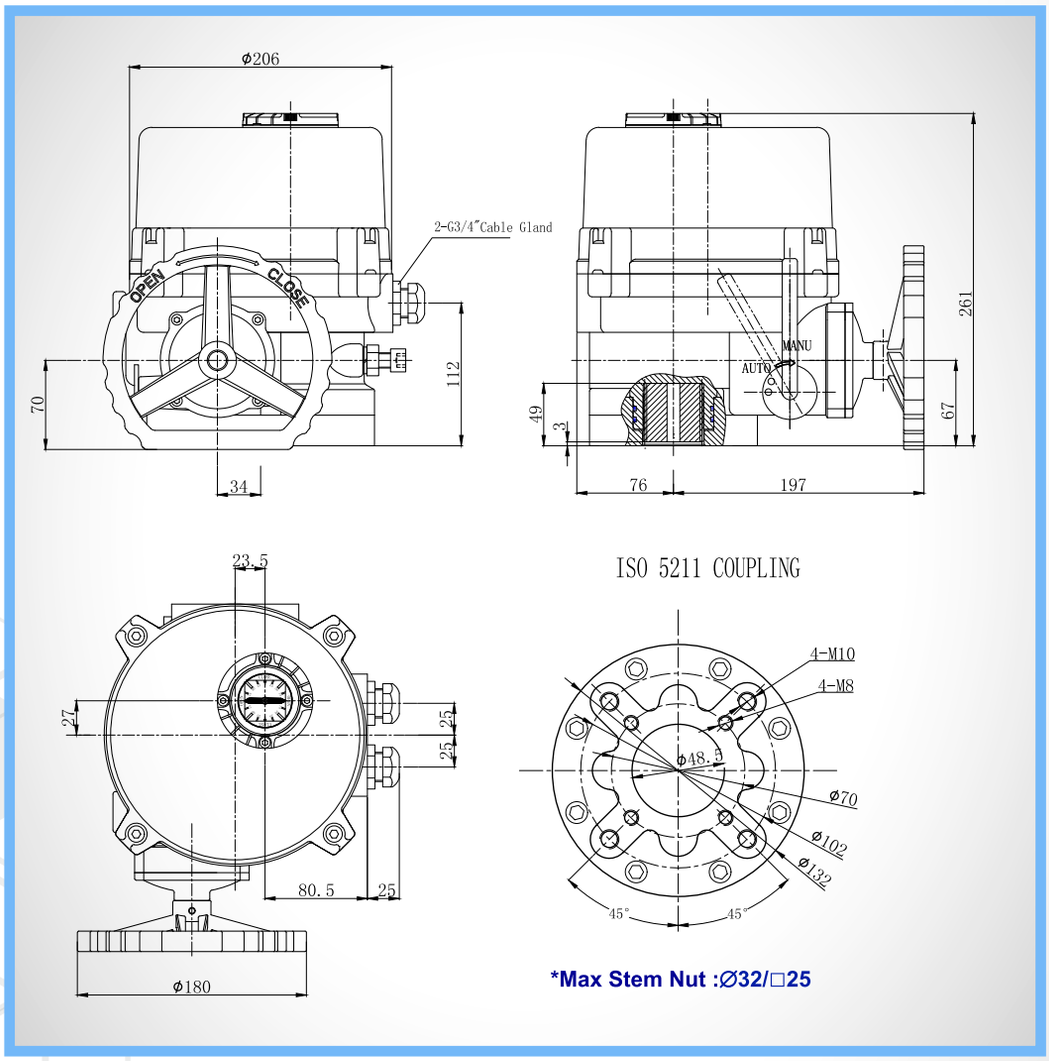

*Actuator with local control based on the basic type

GREATORK ACTUATOR

LQ3

IES

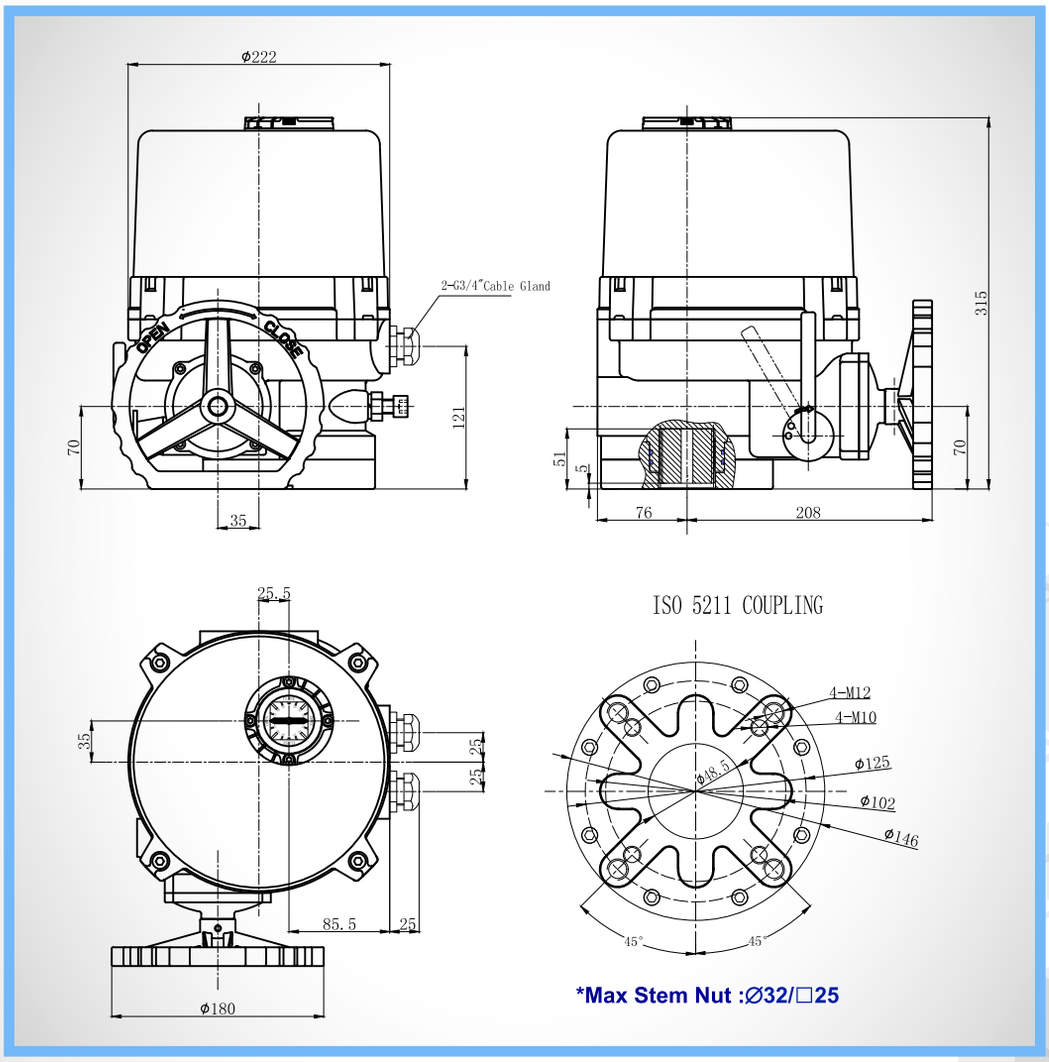

*Actuator with local control based on the basic type

GREATORK ACTUATOR

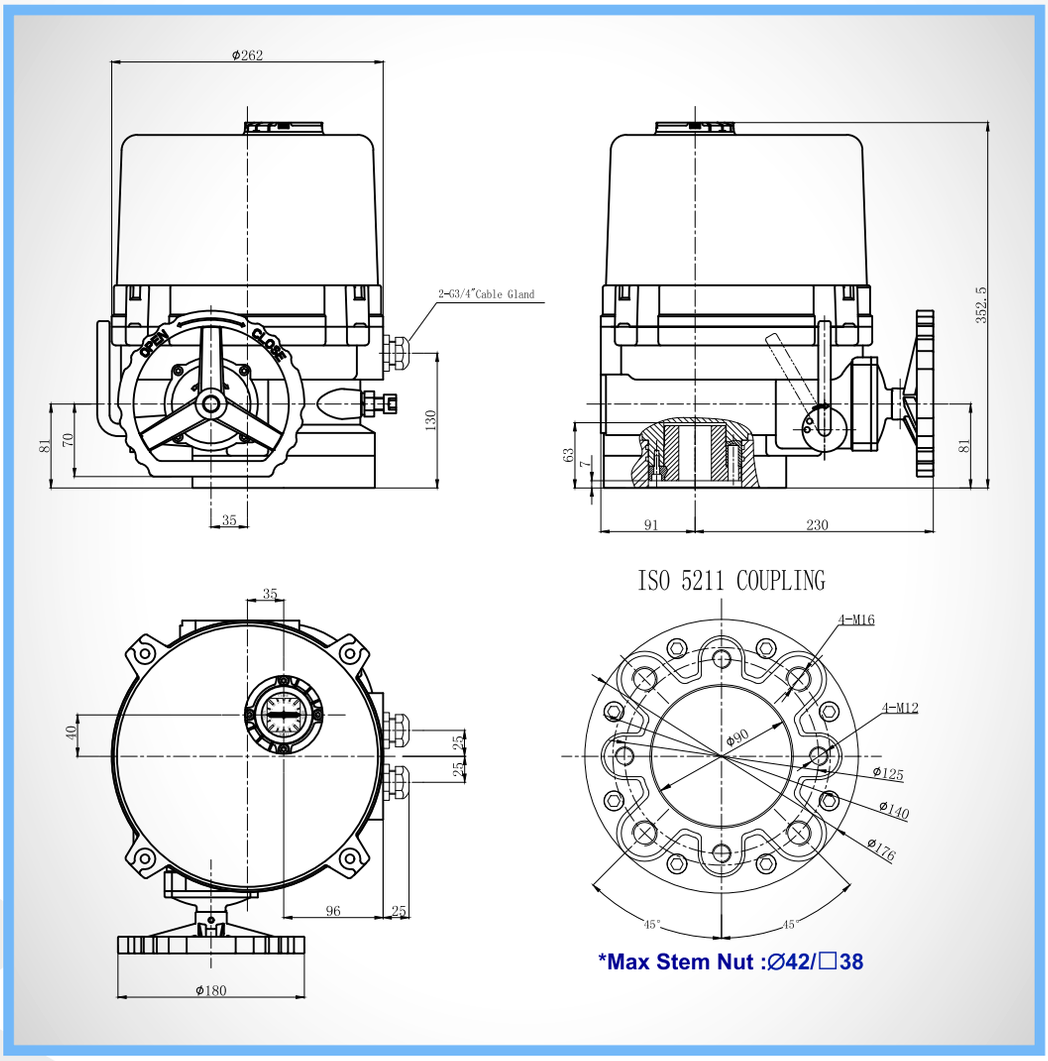

*Actuator with local control based on the basic type

LQ SER

LQ4

GREATORK ACTUATOR

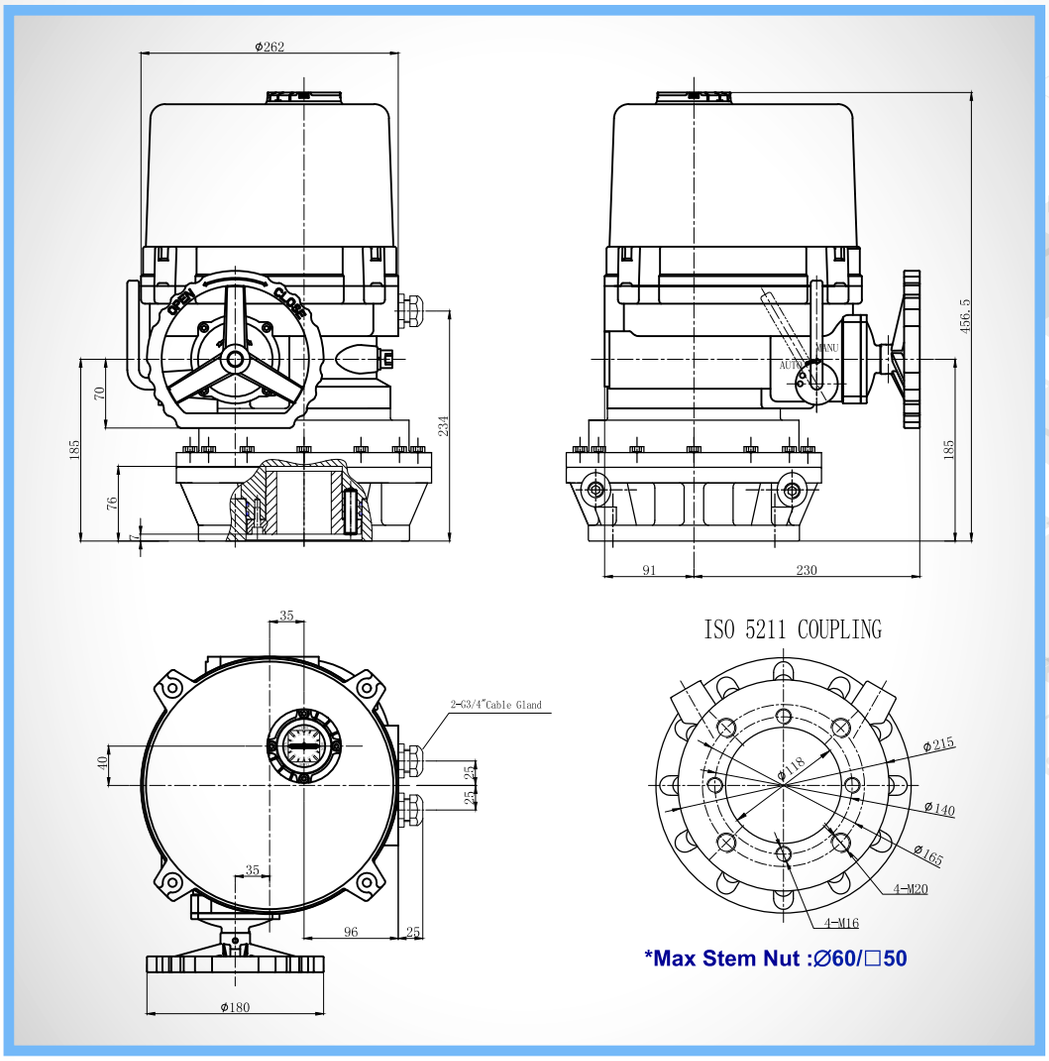

*Actuator with local control based on the basic type

IES

LQ4JS

Actuator with Local Control

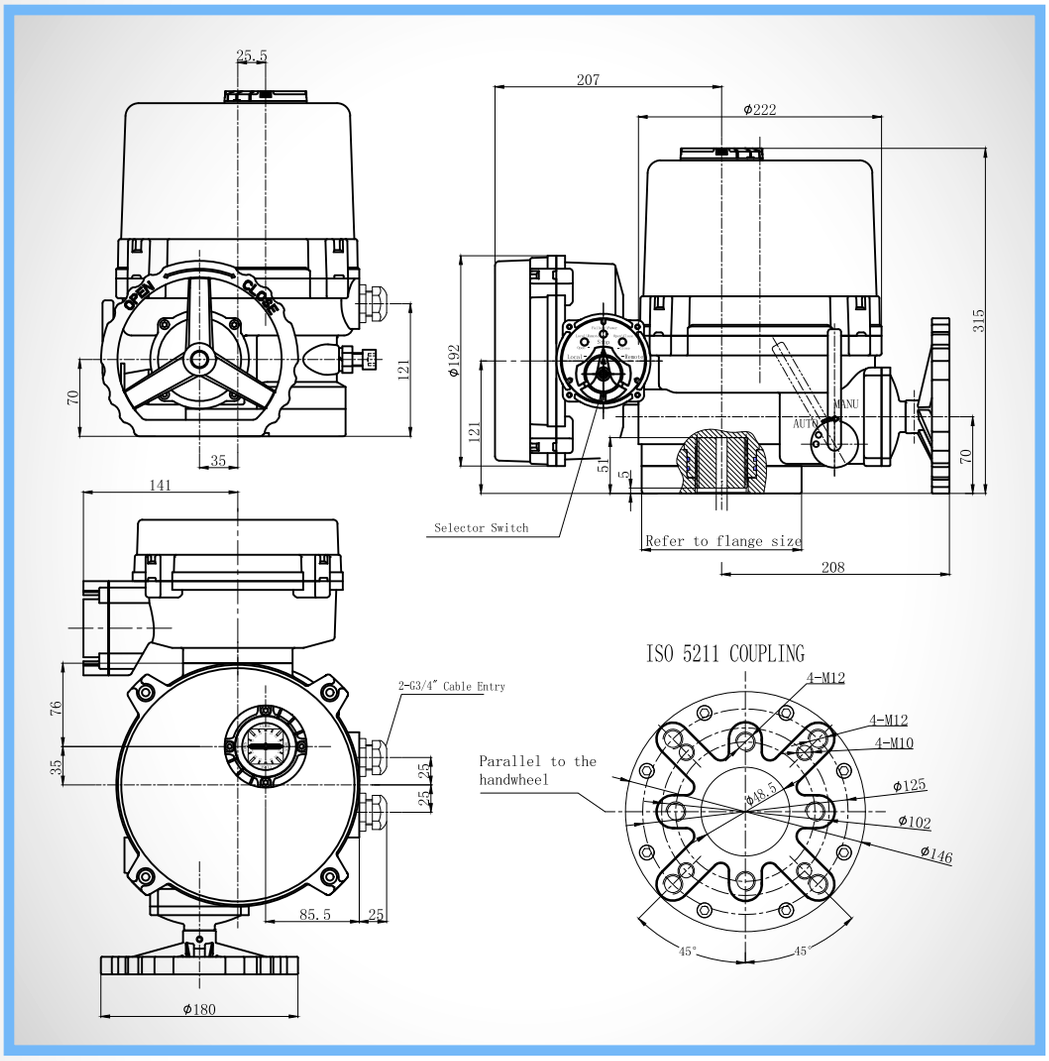

OUR CERTIFICATE

"Vision For Water Technology"

DOSTEK ENGINEERING SDN BHD

(662419-H)

Address : No. 7, Jalan Industri USJ1/7, Taman Perindustrian USJ 1, 47600 Subang Jaya, Selangor Darul Ehsan, Malaysia. Tel: +603 8023 8288 Fax: +603 8023 7288

Email: sales@dostek.com.my